E. L. Munday

RADION
MODEL FSM 5000 VHF-UHF
Portable Field Strength Meter

Instrument Serial Number 3865

OPERATING INSTRUCTIONS

THE RADION CORPORATION

1130 W. Wisconsin Avenue

Chicago 14, Illinois, U.S.A.

MOhawk 4-4617

TABLE OF CONTENTS

SPECIFICATIONS

Frequency Ranges:	50 mc to 220 mc 260 mc to 940 mc
Sensitivity:	VHF, 5 to 50,000 μv UHF, 50 to 100,000 μv
IF Center Frequency:	20 mc
Input Impedance:	300 ohms
Bandwidth:	0.5 mc, 6 db down
Tube Complement:	1 — Radion 5050 3 — 1AE4 1 — 1AD4
Crystal Diodes:	1 — CK705 1 — CK706 2 — CK710

SECTION I

General Description

1. INTRODUCTION.

The Radion Model FSM 5000 VHF-UHF Portable Field Strength Meter is a light-weight, completely portable instrument that tunes the VHF and UHF bands. It is specifically designed for use by service technicians or field engineers engaged in the measurement of absolute or relative values of TV signals.

The instrument is truly portable in that no source of AC power is required and that it weighs less than 16 pounds with batteries installed. The built-in automatic-gain-control (AGC) feature enables measurements in microvolts to be made of absolute field strength. In addition, the AGC can be disabled in order to permit the measurement of relative values of field strength. The sound and video carriers of a television signal can be measured individually because of the high selectivity of the instrument. Screwdriver adjustments are provided as a means of compensation for aging of the batteries. Battery condition can be checked at any time by using the front-panel meter.

2. ACCURACY.

The Radion Model FSM 5000 Field Strength Meter is calibrated for its present set of tubes and crystal diodes. When any of these are replaced, the calibration may change; however, with a given tube and crystal complement, measurements made on successive days should have good repeatability because the instrument can be adjusted to insure constant battery voltages. When it is necessary to know the absolute signal strength to a high degree of accuracy, the instrument can be calibrated against a signal generator having a calibrated output. The instrument will retain this calibration very well.

3. BATTERIES.

Batteries are not supplied with the Radion FSM 5000 Field Strength Meter. The following battery types are required:

Two 1 1/2-volt A batteries (Burgess 4F, Eveready 742, or equivalent).
Three 45-volt B batteries (Burgess M-30, Eveready 482, or equivalent).

4. ACCESSORY EQUIPMENT.

The following equipment is not supplied with the instrument but will increase its usefulness and is therefore recommended:

Radion Model CC-1 carrying case.
Radion Model UPA-1 UHF probe antenna.
(These are available through your Radion distributor.)

Earphones of 2,000-ohm magnetic type.
Phone plug (Mallory Type 75 or equivalent).
(These are available through your local parts distributor.)

SECTION II

Operation

CAUTION— Do not adjust the battery voltages with earphones plugged in. This will cause the voltages to be set too high and may burn out tube filaments.

The filaments may also be burned out if the filament and B+ adjustments are not set to their maximum counter-clockwise positions when new batteries are installed.

PART A. INSTALLATION OF BATTERIES

1. INSTALLATION PROCEDURE.

a. Remove the back panel by pressing up on the bottom center of the meter case. This will free the pin that holds the back panel to the case and allow it to be removed.

b. Insert the plugs in the three 45-volt B batteries, and place the batteries in the bottom of the cabinet with the battery plugs to the rear, facing you.

c. Insert the plugs in the two 1 1/2-volt A batteries, and place the batteries in the holder (above the B batteries) with the battery plugs to the rear, facing you.

d. Batteries should be snug in the case and far enough inside the case to permit replacement of the rear cover.

2. BATTERY CHECKING.

To check the condition of the batteries, turn the control switch to the CHECK FIL position and to the CHECK B+ position. If the needle of the front-panel meter coincides with the red line on the dial in both switch positions, no further adjustments are necessary. If the batteries have aged and the needle does not coincide with the red line, adjust the controls at the rear of the instrument with a screwdriver until the needle does center on the red line. Be certain that this is done in both the CHECK FIL and the CHECK B+ positions. When the needle cannot be made to coincide with the red line, the batteries should be replaced.

CAUTION— Make certain that the earphones are removed during check.

PART B. MEASUREMENT OF SIGNAL LEVELS

NOTE: Check the filament and B+ readings before using the meter. Make any required adjustments to insure accurate measurements.

1. ANTENNA CONNECTIONS.

Different connections of the antenna jumpers are required when making VHF or UHF measurements. Connect the antenna jumpers in accordance with the diagram on the front panel of the meter.

2. MEASUREMENT OF ABSOLUTE VALUES OF RECEIVED SIGNALS.

Readings of absolute values in microvolts are useful in the selection of antennas, in trouble shooting receivers, and in checking oscillator radiation in receivers.

Turn the meter switch to the HIGH SENS or LOW SENS positions, depending upon the estimated signal strength in the area. Using earphones, tune the field-strength meter to the desired frequency. (Although both the sound and the picture carriers can be measured individually, select the sound rather than the picture carrier because the sound has a more nearly constant amplitude. The picture carrier sounds like a 60-cycle hum and is at the left on the dial or below the sound carrier in frequency.)

After tuning the instrument to the desired frequency, remove the earphone plug from its jack. When connected, the earphones will reduce the meter deflection. Read the signal strength on the scale which corresponds to the SENS position that is being used.

3. MEASUREMENT OF RELATIVE VALUES OF RECEIVED SIGNALS.

Relative values of the strength of TV signals are of tremendous help when selecting the best location for an antenna. To obtain relative readings, turn the meter switch to the VAR SENS position, and tune in the desired signal. Adjust the sensitivity control until a suitable meter deflection is obtained. With the switch in the VAR SENS position, small percentage changes of signal strength give large changes in the deflection of the meter. This makes possible the most accurate antenna adjustment for height, direction and angle.

SECTION III

Basic Uses

1. DETERMINING ANTENNA LOCATION.

Before determining the location for a UHF or a VHF antenna, measure the relative strength of the received signal with the instrument set to the VAR SENS position. Make this measurement with the antenna in several locations, and select the one where the strongest signal is received. This method eliminates the guesswork that has proved so costly to many companies doing installation work, particularly in UHF and VHF extreme fringe areas.

In UHF areas, a variation of 12 inches in the antenna location can mean the difference between no picture and an excellent one. A probe antenna, such as the Radion Model UPA-1, can be of great help in such installations; however, since UHF antennas are generally small in size, any type commonly used in your locality may suffice.

2. SELECTING BEST ANTENNA FOR A GIVEN LOCATION.

In order to determine the best of several types of antennas, measure the absolute value of the received signal by taking measurements with each antenna individually. Make sure that all measurements are made in the same location. In this manner, the exact number of microvolts of signal developed by each one can be determined. The best antenna can then be installed, eliminating the guesswork in the selection of an array.

3. LOCATING TVI.

In order to locate the television signal interference (TVI), connect the field-strength meter to the customer's antenna. By rotating the array, the direction of the source of interference can be determined. The use of earphones will enable you to monitor the audio signal.

You can then determine whether it is amateur, police, a local communication system, or some other type of transmission that is causing the interference.

4. TROUBLE SHOOTING TV RECEIVERS.

Time and money can be saved by first determining whether the antenna or the receiver is at fault when reception is affected. Check the absolute value of the signal strength at the antenna terminals of the set. If you find at this point a sufficient number of microvolts of signal to produce a satisfactory picture, you can be reasonably sure that the trouble is in the receiver. (High-gain cascode type tuners usually require approximately 200 microvolts of signal for a steady, snow-free picture.)

5. CHECKING OSCILLATOR RADIATION.

Measure the absolute value of the oscillator voltage conducted to the antenna terminals by connecting the instrument to the antenna terminals and then by tuning it to the oscillator frequency. To determine the actual amount of radiation in microvolts, connect a separate antenna to the field-strength meter and direct it toward either the receiver chassis or the receiver antenna.

6. DETERMINING IMPEDANCE MATCHING IN LEAD-INS.

Form a loop of one turn of solid wire, and connect the leads from this loop to the appropriate antenna terminals on the instrument. Measure the relative value of the signal voltage on the lead-in while moving the loop along the lead-in. The ratio of the maximum to the minimum reading will give the standing-wave ratio and will indicate the degree of mismatch at the ends of the lead-in.

SECTION IV

Maintenance

1. WARRANTY.

This meter is guaranteed for 90 days from the date of purchase against any inherent manufacturing defects. However, this warranty is NOT VALID unless the warranty card attached to the meter is filled out and mailed as directed within five days from the date of purchase. If you have not already done so, send in this warranty card today.

2. BATTERY REPLACEMENT.

The battery voltages should always be checked first (as described in this manual), if the instrument is inoperative. Replace the batteries when the meter needle cannot be set to the red line with the regular screwdriver adjustments.

3. TROUBLE SHOOTING THE FSM 5000.

a. Components.

All electronic parts in the FSM 5000 meter (except the Radion 5050 tube) are standard and may be obtained through your nearest parts jobber. Your Radion Distributor generally stocks 5050 tubes; but it you have difficulty in obtaining one or any replacement part, write to the Radion Corporation, Electronic Service Dept., 1130 W. Wisconsin Ave., Chicago 14, Illinois.

b. Major Repairs.

Any major repair work requires the use of a high quality, calibrated signal generator; therefore, in order to save your time and money, do not attempt major repairs without first writing to the Radion Corporation service department. In most cases, it will be to your benefit to return the meter to the factory for repair and recalibration.

c. Returning the Meter to the Factory for Service.

If possible, return the meter through the parts jobber from whom you bought it. Pack it well to withstand shipping. Along with the meter, please send us a letter stating in detail what your specific problem is. By so doing, you can be assured of the fastest possible service.

4. PARTS LIST.

See back page.

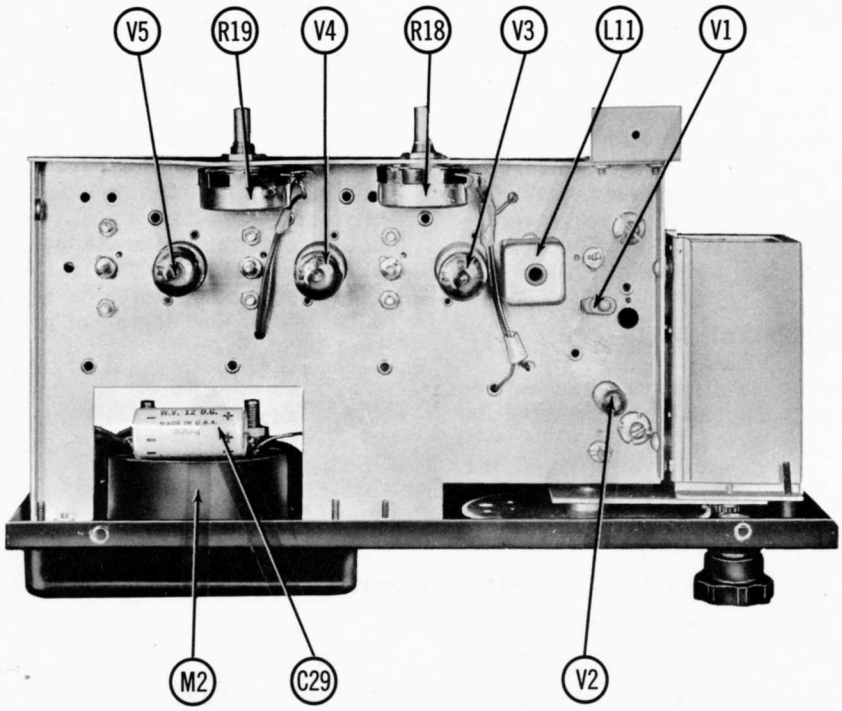

Fig. 1. Top Chassis View of Model FSM 5000.

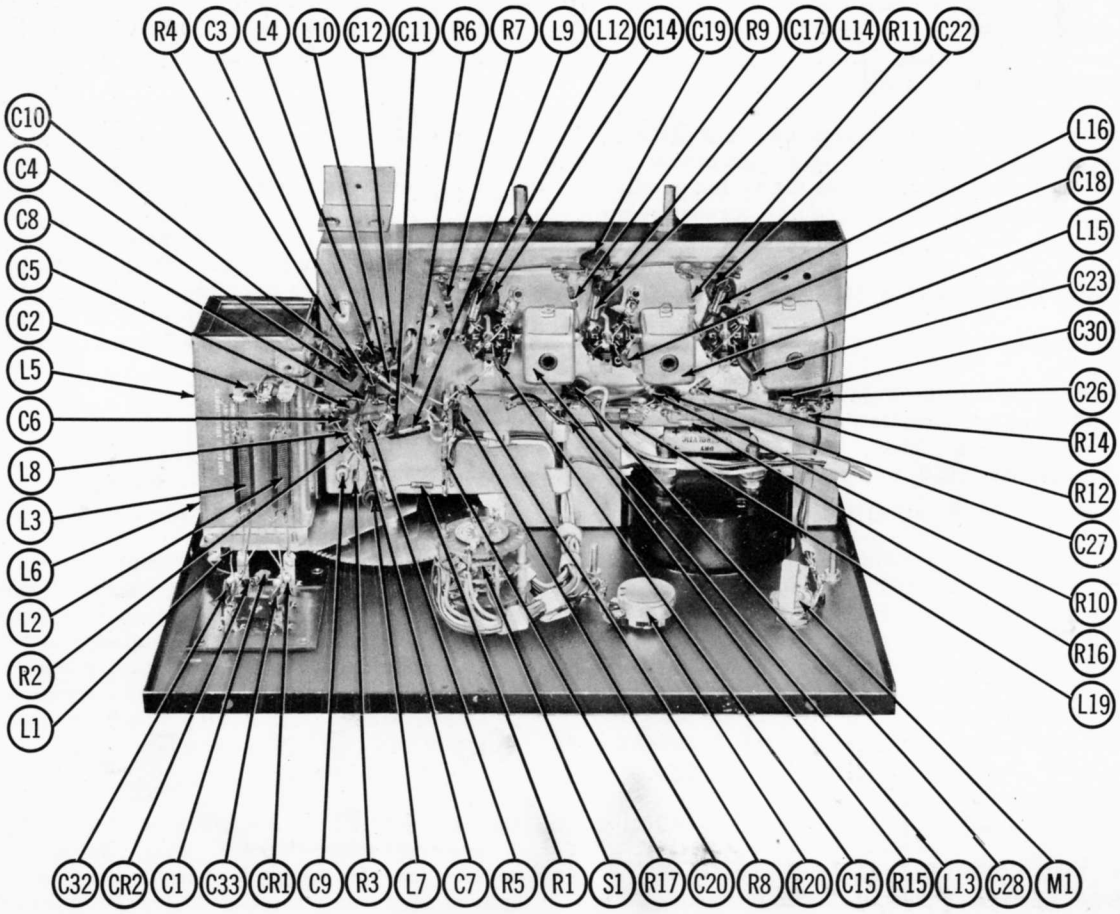

Fig. 2. Bottom Chassis View of Model FSM 5000.

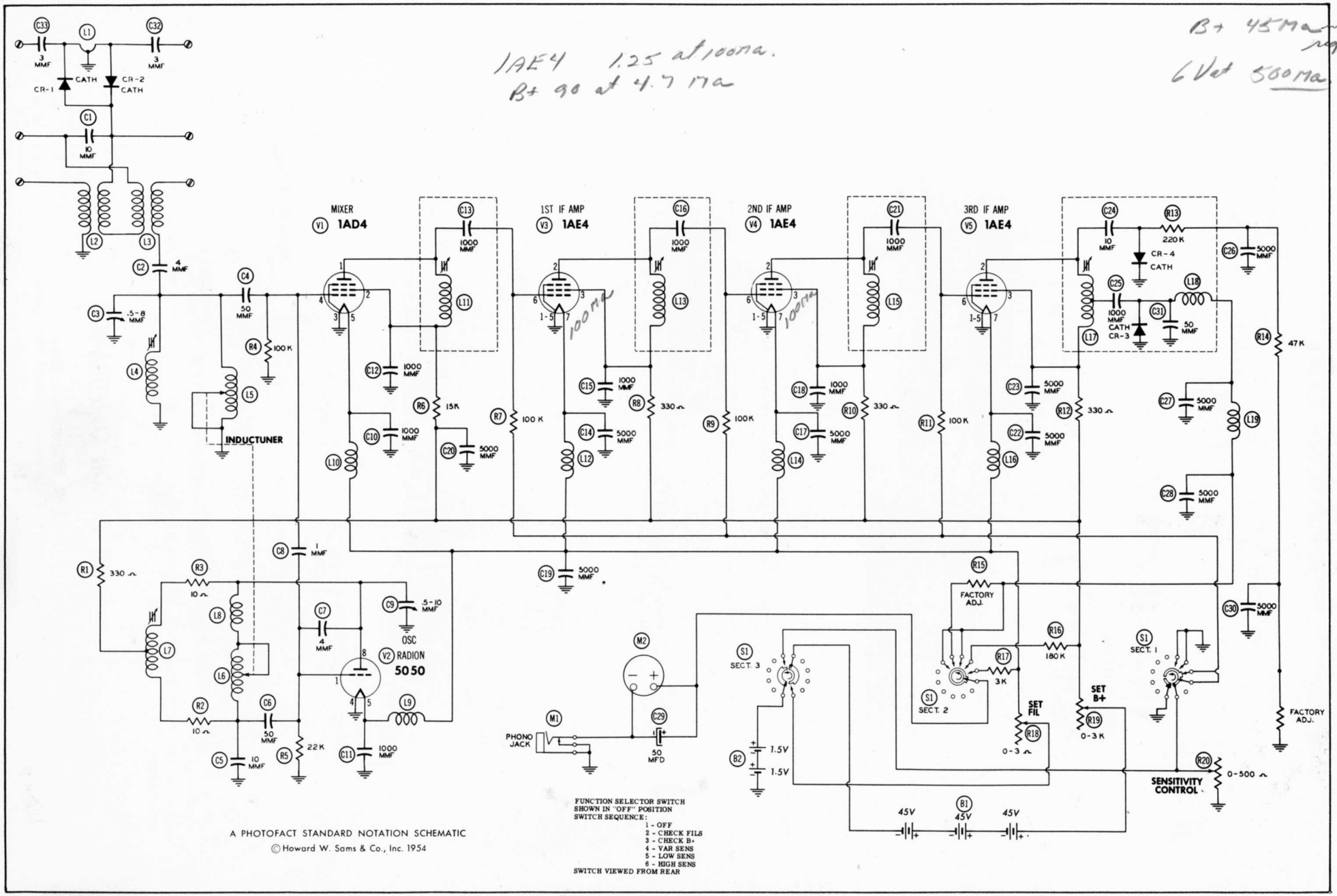

Fig. 3. Schematic Diagram of Model FSM 5000.

PARTS LIST

TUBES

V1	1AD4
V2	Radion 5050
V3	1AE4
V4	1AE4
V5	1AE4

CAPACITORS

	VALUES (in mmf)	VOLTAGE (WVDC)	TYPE	PART NO.
C1	10	500	Disc	5067
C2	4	500	CN	5097
C3	.5 - 8.0	600	Trimmer	5056
C4	50	500	Disc	5066
C5	10	500	Disc	5067
C6	50	500	Disc	5066
C7	4	500	Disc	5097
C8	1	500	Disc	5080
C9	.5 - 8.0	600	Trimmer	5056
C10	1000	500	Disc	5065
C11	1000	500	Disc	5065
C12	1000	500	Disc	5065
C13	1000	500	Disc	5065
C14	5000	500	Disc	5055
C15	1000	500	Disc	5065
C16	1000	500	Disc	5065
C17	5000	500	Disc	5055
C18	1000	500	Disc	5065
C19	5000	500	Disc	5055
C20	5000	500	Disc	5055
C21	1000	500	Disc	5065
C22	5000	500	Disc	5055
C23	5000	500	Disc	5055
C24	10	500	Disc	5067
C25	1000	500	Disc	5065
C26	5000	500	Disc	5055
C27	5000	500	Disc	5055
C28	5000	500	Disc	5055
C29	50 mfd	12 volts	CBT	5081
C30	5000	500	Disc	5055
C31	50	500	Disc	5066
C32	3	500	Disc	5158
C33	3	500	Disc	5158

CRYSTAL DIODES

CR-1	CK710
CR-2	CK710
CR-3	CK706
CR-4	CK705

BATTERIES

B1	three 45-volt Burgess 4F, Eveready 742, or equivalent.
B2	two 1.5-volt Burgess M-30, Eveready 482, or equivalent.

RESISTORS

	VALUES (in ohms)	TOLERANCE (per cent)	WATTAGE	PART NO.
R1	330	20	1/2	5057
R2	10	20	1/2	5062
R3	10	20	1/2	5062
R4	100K	20	1/2	5084
R5	22K	20	1/2	5059
R6	15K	10	1/2	5060
R7	100K	20	1/2	5084
R8	330	20	1/2	5057
R9	100K	20	1/2	5084
R10	330	20	1/2	5057
R11	100K	20	1/2	5084
R12	330	20	1/2	5057
R13	220K	20	1/2	5058
R14	47K	20	1/2	5061
R15	Production adjustment			
R16	180K	5	1/2	5063
R17	3000	5	1/2	5064
R18	3 (Pot.)		2 WW	5051
R19	3K (Pot.)		2 WW	5048
R20	500 (Pot.)		1/2 Carbon	5077
R21	Production adjustment			

COILS

		PART NO.
L1	UHF antenna	5022
L2	Baluntran	5011
L3	Baluntran	5011
L4	RF	5028
L5-L6	Inductuner	5049
L7	Osc. shunt	5027
L8	Osc. series	5021
L9	Filter choke	5013
L10	Filter choke	5013
L11	1st IF	5029
L12	Filter choke	5013
L13	2nd IF	5029
L14	Filter choke	5013
L15	3rd IF	5029
L16	Filter choke	5013
L17	4th IF	5031
L18	Det. filter	5014
L19	Det. filter	5015

MISCELLANEOUS

		PART NO.
S1	Function Switch	5033
M1	Phone jack	5052
M2	0 to 1-ma DC meter	5002

THE RADION CORPORATION

1130 W. Wisconsin Avenue

Chicago 14, Illinois, U.S.A.